Chassis Frame Assembly

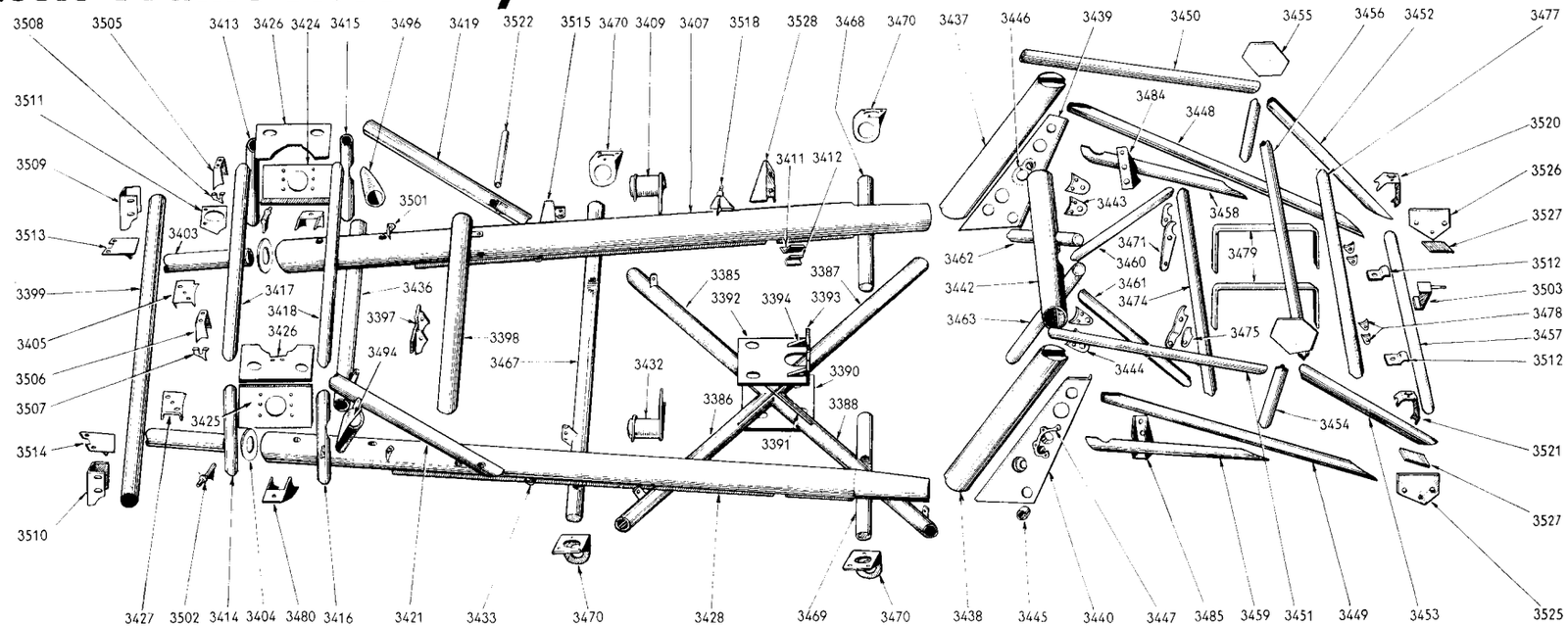

Item No.	Part No.	Quantity	Description	Notes
†3380	52748	1	Main Chassis Assembly—R.H.D.	
†3381	53629	1	,, ,, ,, —L.H.D.	
†3382	52749	1	,, Frame Sub-assembly—R.H.D.	
†3383	53626	1	,, ,, ,, —L.H.D.	
†3384	52750	1	Cruciform Sub-assembly	
3385	52751	1	,, Member Forward—R.H.	
3386	52752	1	,, ,, ,, —L.H.	
3387	52753	1	,, ,, Rear—R.H.	
3388	52754	1	,, ,, ,, —L.H.	
†3389	52755	2	,, Centre Plate	
3390	52756	1	,, Bottom Plate	
3391	52757	1	,, Central Bracing Assembly	
3392	52758	1	,, Top Plate	
3393	52759	1	,, Mounting Plate	
3394	52760	2	,, Fillet Plate	
†3395	52761	1	Rear Engine Bearer Tube Assembly—R.H.D.	
†3396	53648	1	,, ,, ,, ,, ,, —L.H.D.	
3397	52762	1	,, ,, Mounting Plate Assembly	
3398	52765	1	,, ,, Bearer Tube	
3399	52767	1	Front Bumper Support Tube	
†3400	52768	1	Main Chassis Side Member Assembly—L.H. (R.H.D.)	
†3401	53623	1	,, ,, ,, ,, ,, —L.H. (L.H.D.)	
†3402	52769	2	Front Engine Bearer Tube Assembly	
3403	52770	2	,, ,, ,, ,,	

Item No.	Part No.	Quantity	Description	Notes
3404	52771	2	Anchor Plate	
3405	52783	1	Front Engine Mounting Bracket—R.H.	
†3406	52773	4	Bush Suspension Lower Arm Bracket	
3407	53447	1	Main Chassis Side Member—R.H. (R.H.D.)	
†3408	53627	1	,, ,, ,, ,, —R.H. (L.H.D.)	
3409	52959	1	Torsion Bar Adjustment Arm Anchor Plate Assembly —R.H.	
†3410	53461	2	Locknuts—Torsion Bar Adjusting Arm	
3411	52837	1	Cable Abutment Bracket Plate—R.H.	
3412	52838	1	,, ,, ,, ,, —L.H.	
3413	52792	1	Front Upright Support—R.H.	
3414	52793	1	,, ,, ,, —L.H.	
3415	52794	1	Rear ,, ,, —R.H.	
3416	52795	1	,, ,, ,, —L.H.	
3417	52796	1	Front Upper Crossmember	
3418	52797	1	Rear ,, Crossmember	
3419	52798	1	,, Strut—R.H. (R.H.D.)	
†3420	53619	1	,, ,, —R.H. (L.H.D.)	
3421	52799	1	,, ,, —L.H. (R.H.D.)	
†3422	53620	1	,, ,, —L.H. (L.H.D.)	
†3423	53204	1	Bracket—Fluid Reservoir	
3424	52800	1	Upper Arm Mounting Plate—R.H.	
3425	52801	1	,, ,, ,, ,, —L.H.	

* *Denotes items common to Jupiter*

† *Denotes items not illustrated*

Always quote engine, chassis, part and item numbers in full.